LOC G | PRINT DIST 14

MADE IN AMERICAN PROJECTION

© 1985 BY AMP INCORPORATED. ALL RIGHTS RESERVED. AMP PRODUCTS COVERED BY PATENTS AND/OR PATENTS PENDING.

REVISIONS

LTR	DESCRIPTION	DATE	APPROVED
A	REDRAWN, REVISED (ADDED TAPE NO P-6079)	3-16-70	FCY
B	INACTIVATED 2--1 PER ECN P-9260 PMF	11/9/82	[illegible]
C	OBS. 2--1 G2591 BT	10-19-87	PMF
D	REV PER G-4732 JT	7/22/88	[illegible]

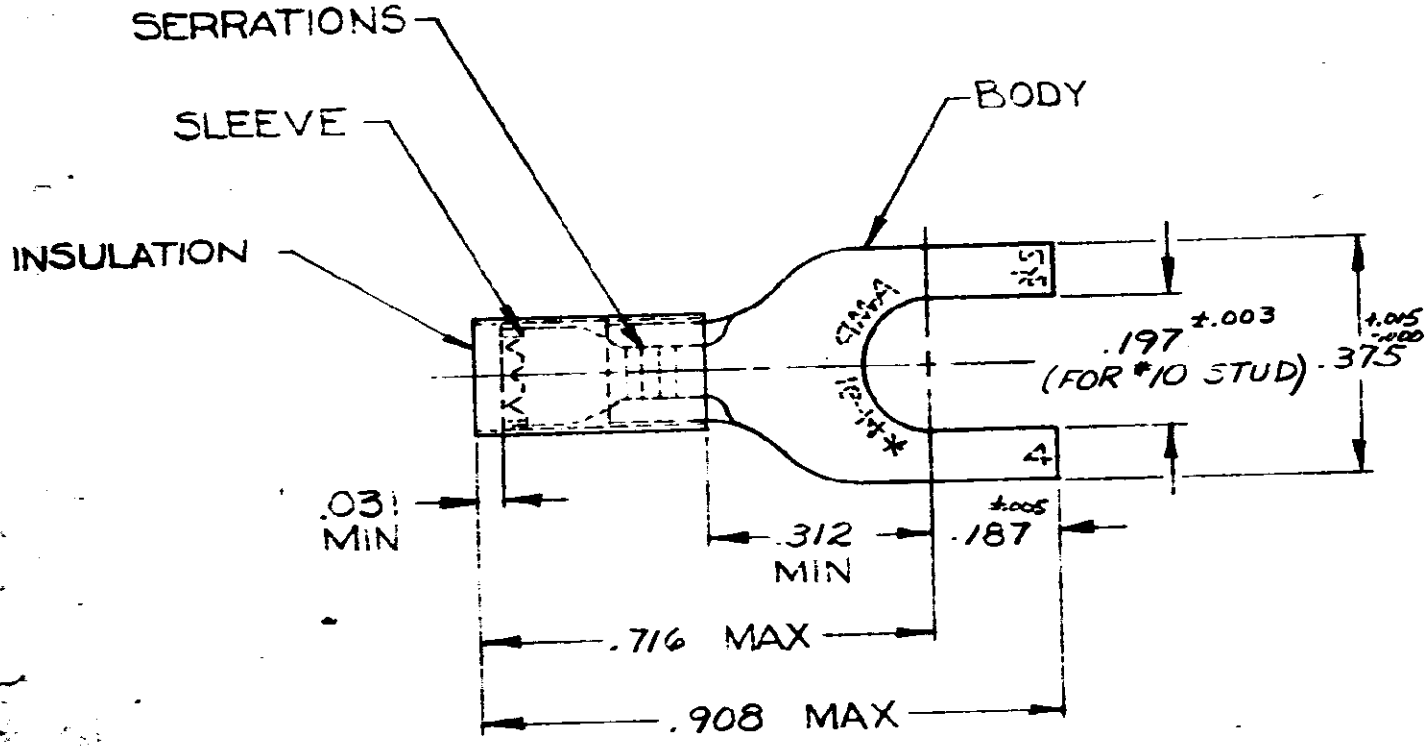

TONGUE MATERIAL THK = .031 ±.002
FOR .105 TO .150 WIRE INSULATION DIA

QTY	DESCRIPTION	PART NO
	32057 ON TAPE	OBSOLETE ~~2-32057-7~~
1	WIRE TERMINAL	32057

BODY: COPPER (QQ-C-576) TIN PL (MIL-T-10727)
SLEEVE: COPPER (QQ-C-576)
INSULATION: NYLON COLOR: BLUE
MATERIAL & FINISH

UNLESS OTHERWISE SPECIFIED DIMENSIONS ARE IN INCHES
TOLERANCES ON:
DECIMALS ±.008
ANGLES ±5°

MATERIAL: SEE TABLE

CONTRACT NO. #
DR. 3-12-70
CHK. 3-16-70
APPD 3-16-70
REL 3-17-70
DSGN APPD
OTHER APPD

AMP INCORPORATED HARRISBURG, PENNSYLVANIA

NAME: WIRE TERMINAL P.I.D.G. - SPADE WIRE SIZE: 16-14

SIZE	CODE IDENT NO.	NUMBER
A	00779	32057

SCALE NTS

CUSTOMER DRAWING